DEHN protects Pipelines

Cathodic Corrosion Protection Solutions

www.dehn-international.com

DEHN protects pipelines

fotolia.com

DEHN protects pipelines from overvoltage interferences

Pipelines operate under high pressures. If they are additionally loaded, the pipeline material, for example steel, quickly reaches its limit. In extreme cases, heavy corrosion can cause failure in the pipeline, resulting in leakage which may cause enormous material and environmental damage. Therefore, the condition of the pipeline must be continuously monitored during operation. Particularly any kind of corrosion must be immediately spotted throughout the complete pipeline.

Passive corrosion protection is achieved by coating and painting the pipeline. This, however, is not sufficient since even small defects in the coating quickly cause local corrosion effects (electrochemical corrosion) in the pipeline. Moreover, a.c. corrosion can occur as a result of a.c. voltage interference. Active cathodic corrosion protection must therefore be combined with passive corrosion protection.

Cathodic corrosion protection requires that the pipeline is continuously monitored. To this end, the voltage level along the pipeline is detected at the relevant test joints and adapted to the intensity of the protective current, if necessary. In addition, sudden pressure drops (leakage) is identified by continuously measuring the pressure. Quantity measurements are also frequently carried out to compare the quantity at the beginning of the pipeline with the quantity at the end of the pipeline and trigger an alarm if a difference is identified. In order to specifically protect these high availability measuring systems, DEHN offers protection solutions for use in potentially explosive atmospheres which are certified according to ATEC* / IECEx**.

Due to the extended surface of pipelines, there is a high risk of lightning effects and overvoltage interference, for example caused by nearby high-voltage and railway systems. Since the pipeline is galvanically connected to the cathodic protection rectifier, lightning and surge protection measures are required to discharge all overvoltages. The aim is to prevent fire or failure of the cathodic protection rectifier. To this end, DEHN offers coordinated solutions

* ATEX Guidelines: Guidelines of the European Union on Explosion Protection („ATmosphère EXplosibles“)
** IECEx Standards: Standards of the International Electrotechnical Commission on Explosion Protection


7
3
EX
2
6
1
5

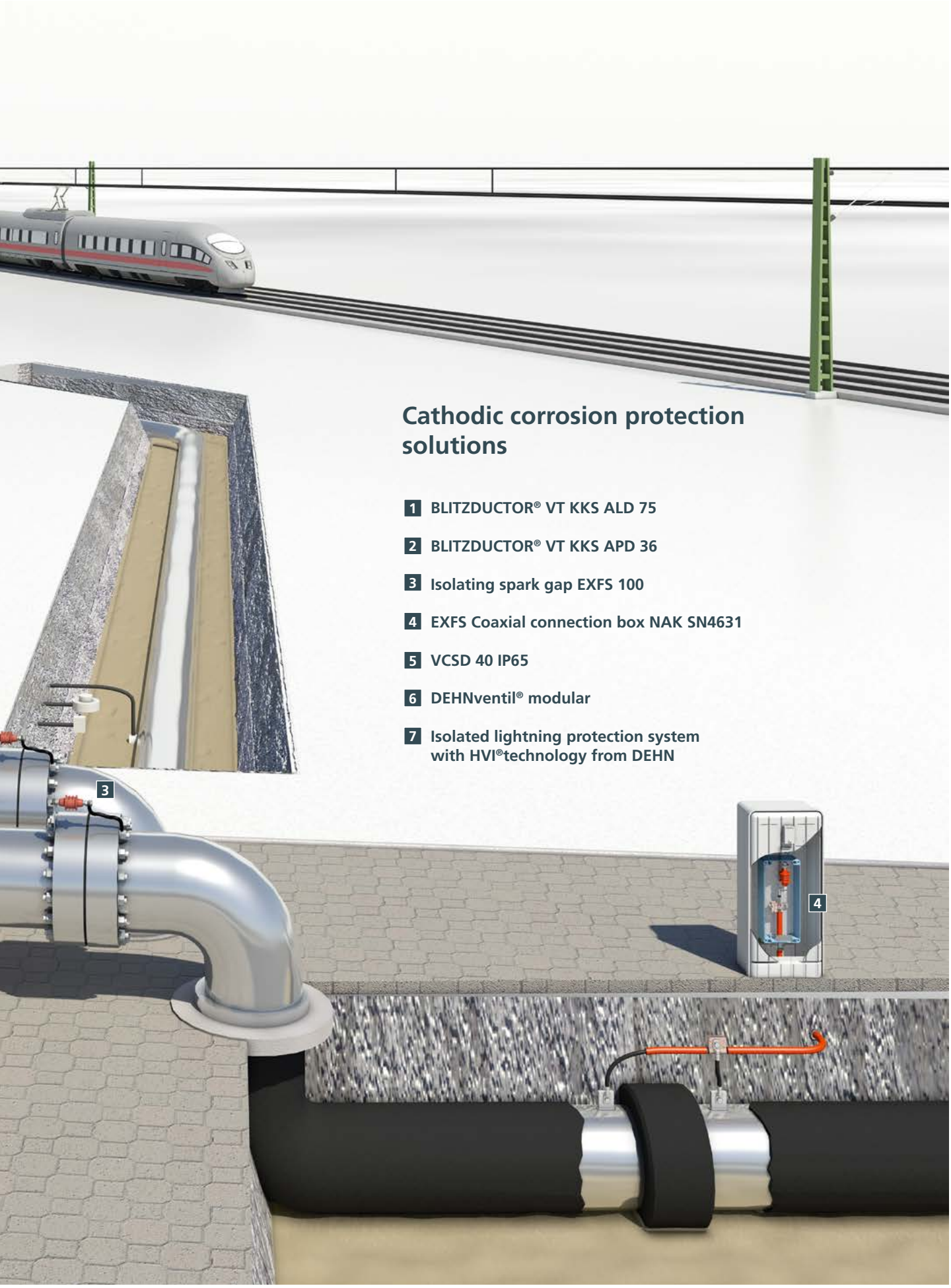

Cathodic corrosion protection solutions

1. BLITZDUCTOR® VT KKS ALD 75
2. BLITZDUCTOR® VT KKS APD 36
3. Isolating spark gap EXFS 100
4. EXFS Coaxial connection box NAK SN4631
5. VCSD 40 IP65
6. DEHNventil® modular
7. Isolated lightning protection system with HVI®technology from DEHN

High-voltage lines are possible sources of interference voltages for pipelines

fotolia.com

Pipelines influenced by interference voltage

Since pipelines are widely distributed and highly networked, they are often influenced by interference voltages from various sources of interference such as traction power supply systems, high-voltage lines, earth faults and lightning effects.

Interference voltage means non-system voltages which can also occur in the form of transient, temporary or long-duration overvoltage depending on their duration. They can enter a system, for example an insulated pipeline, by means of galvanic, inductive or capacitive coupling and are a frequent source of interference or damage to installations, parts thereof, and persons. Special surge protection solutions allow reduction of these interference voltages to values below the defined limit values.

DEHN has long-standing experience in lightning and surge protection for pipelines. The comprehensive DEHN protection solutions for pipelines are based upon this know-how and intensive research and standardisation work. The protection solutions tested in the DEHN Test Centre reduce lightning damage to insulating flanges, cathodic protection systems and field devices. Downtime and the resulting loss of transport capacity and production caused by all kinds of overvoltage can be minimised.

DEHN offers practice-proven surge protection products and customised protection solutions whose effectiveness can be tested in the DEHN Test Centre.

Electric railways

Electric railways produce galvanically injected stray currents which enter the pipeline via the ground through defects, thus changing the potential of the pipeline by means of interference voltages.

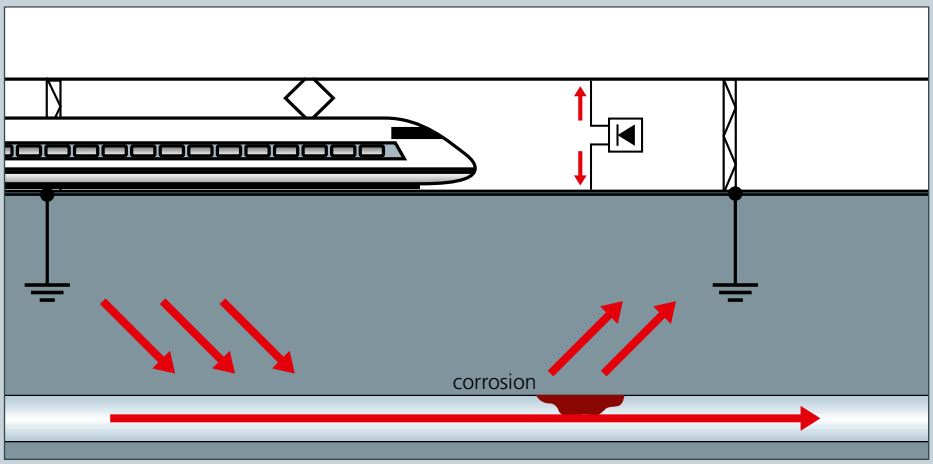

High-voltage lines

High-voltage lines generate electromagnetic fields which are injected into parallel pipelines and often occur in the form of permanent interference voltage.

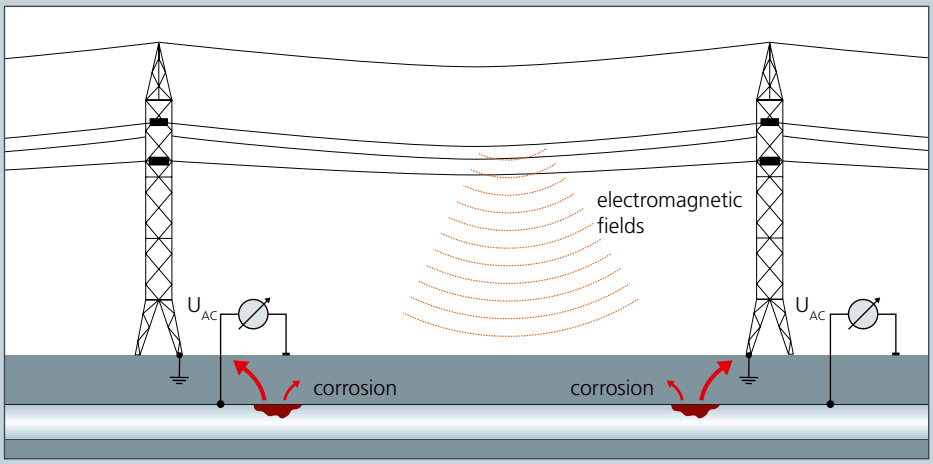

Earth faults

An earth fault causes a potential gradient area in the surrounding soil whose potential affects pipelines located in this area. This potential gradient area thus spreads over to the relevant pipeline network in the form of an interference voltage.

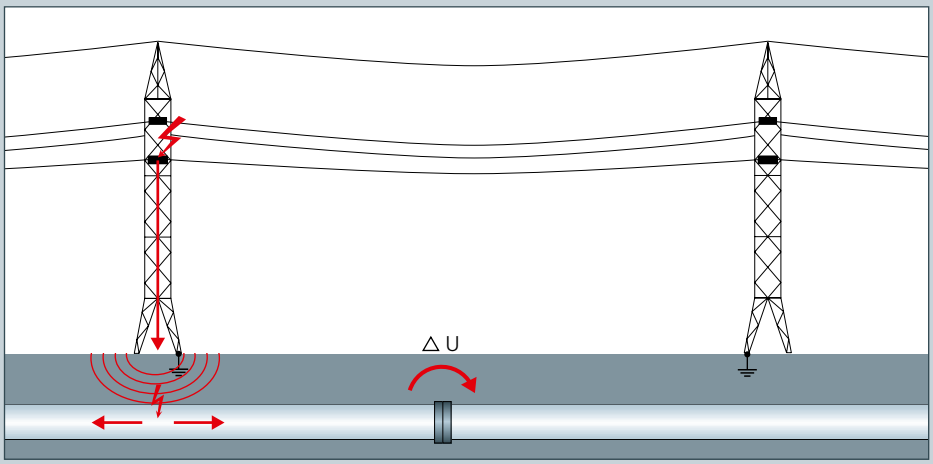

Lightning strike

Lightning overvoltage generates transient interference voltages into nearby systems. Injected via a potential gradient area, they spread over the entire pipeline network.

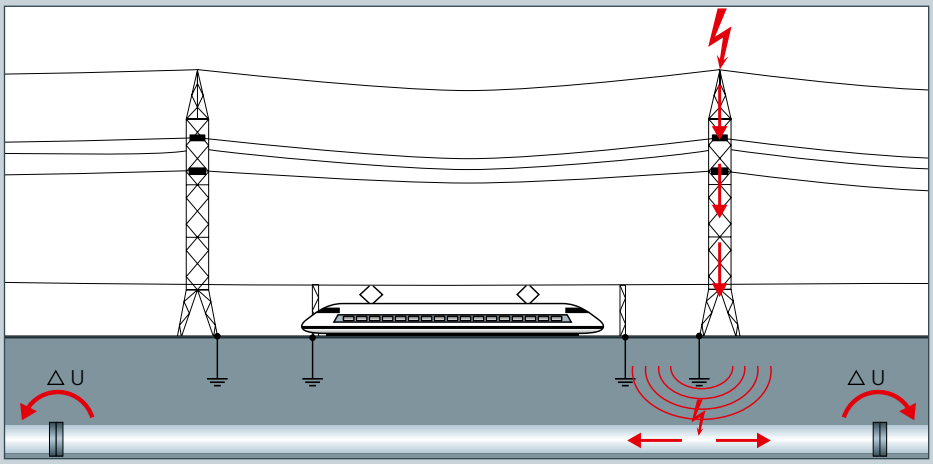

All these interference voltages may cause personal or material damage and a.c. corrosion.

Smart d.c. decoupling device VCSD (Voltage Controlled Smart Decoupling Device)

The smart d.c. decoupling device VCSD 40 IP65 limits long-duration, temporary and transient overvoltage. Long-duration a.c. voltages are limited to a preset value by the d.c. decoupling device (voltage-controlled smart decoupling device) without influencing the required d.c. potential.

Such overvoltage of a given duration or voltage level activates the correct limiting of the VCSD which are assigned to the relevant overvoltage and discharge it to earth without negatively affecting the cathodic protection potential on the pipeline (d.c. potential).

The effects of dangerously high overvoltage can be reduced to a safe level in the immediate vicinity of the VCSD.
The following protection goals can be achieved:

- Personal protection in case of temporary and long-duration overvoltage
- Protection against a.c. corrosion
- Protection of devices and components

1 VCSD 40 IP65

- Voltage-controlled smart decoupling device protects against transient, temporary and long-duration overvoltage
- Adjustable response threshold (3 to 50 V a.c.)
- For flexible use in different applications and operating states

Type	Part No.
VCSD 40 IP65	923 401

Limitation behaviour of VCSD 40 IP65 as a function of time

1 Transient overvoltage is limited to values < 1.25 kV (duration: up to 1 ms).

2 Temporary overvoltage is limited to values < 940 V depending on the duration (duration: 1 ms up to 200 ms).

3 Long-duration overvoltage is limited to values between 3 and 50 V a.c. (freely adjustable) (duration: > 200 ms).

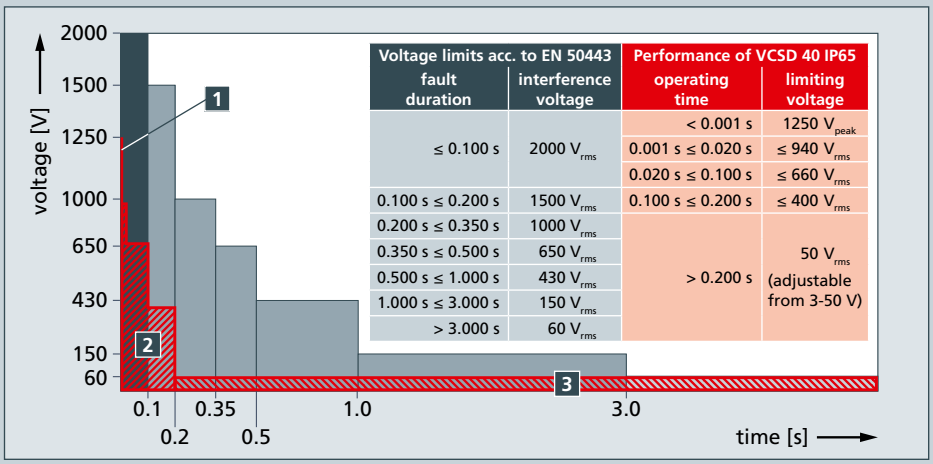

Voltage limits acc. to EN 50443		Performance of VCSD 40 IP65	
fault duration	interference voltage	operating time	limiting voltage
≤ 0.100 s	2000 V_{rms}	< 0.001 s	1250 V_{peak}
		0.001 s ≤ 0.020 s	≤ 940 V_{rms}
		0.020 s ≤ 0.100 s	≤ 660 V_{rms}
0.100 s ≤ 0.200 s	1500 V_{rms}	0.100 s ≤ 0.200 s	≤ 400 V_{rms}
0.200 s ≤ 0.350 s	1000 V_{rms}	> 0.200 s	50 V_{rms} (adjustable from 3-50 V)
0.350 s ≤ 0.500 s	650 V_{rms}		
0.500 s ≤ 1.000 s	430 V_{rms}		
1.000 s ≤ 3.000 s	150 V_{rms}		
> 3.000 s	60 V_{rms}		

Functional description

A single component is not enough to efficiently limit overvoltage.

VCSD 40 IP65 from DEHN evaluates different sensor signals via a control unit, thus coordinating the interaction of the individual functional units consisting of power electronics and a spark gap. Consequently, VCSD 40 IP65 ensures coordinated protection against transient, temporary and long-duration overvoltage.

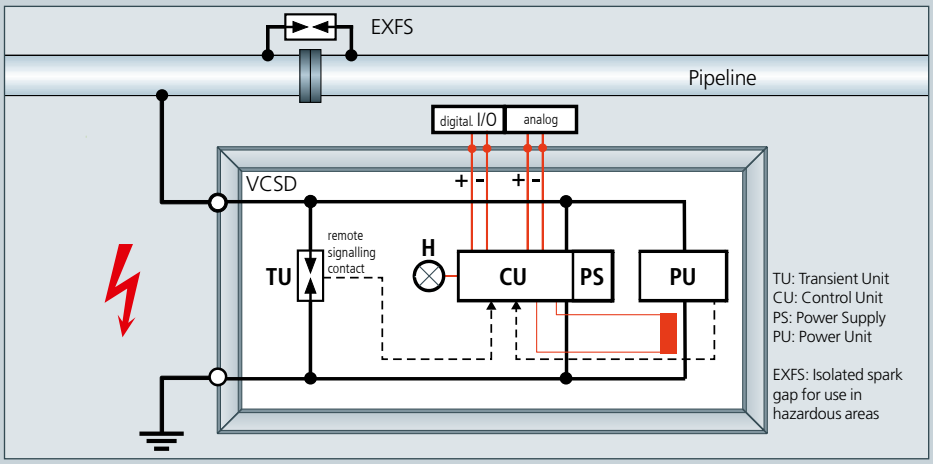

Monitoring / controlling

If a function-critical device error occurs, the digital output is activated. The error can be externally indicated or an external fail-safe switch (FSS) can be activated.

VCSD 40 IP65 can be switched on and off via a digital input.

Contact open: VCSD on
Contact closed: VCSD off

The instantaneous value of the discharge current can be indicated in the form of a 4-20 mA signal (scaled to 0-40 A) via the analogue output. In case of a function-critical device error, a fixed value of 21.8 mA is indicated.

An external voltage supply is required to perform a self-test (testing the VCSD) and to supply the analogue output.

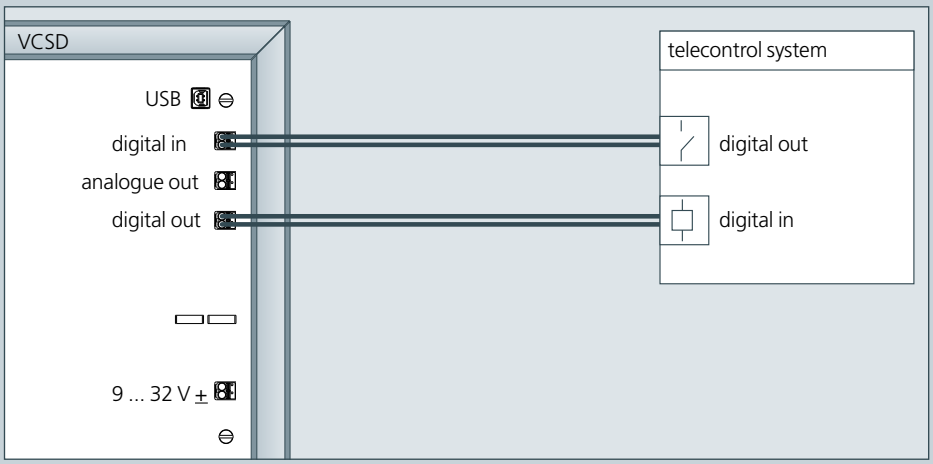

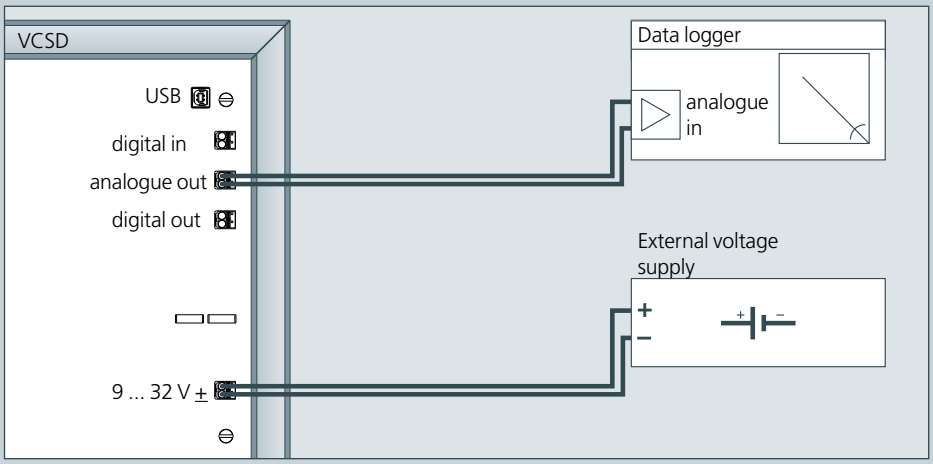

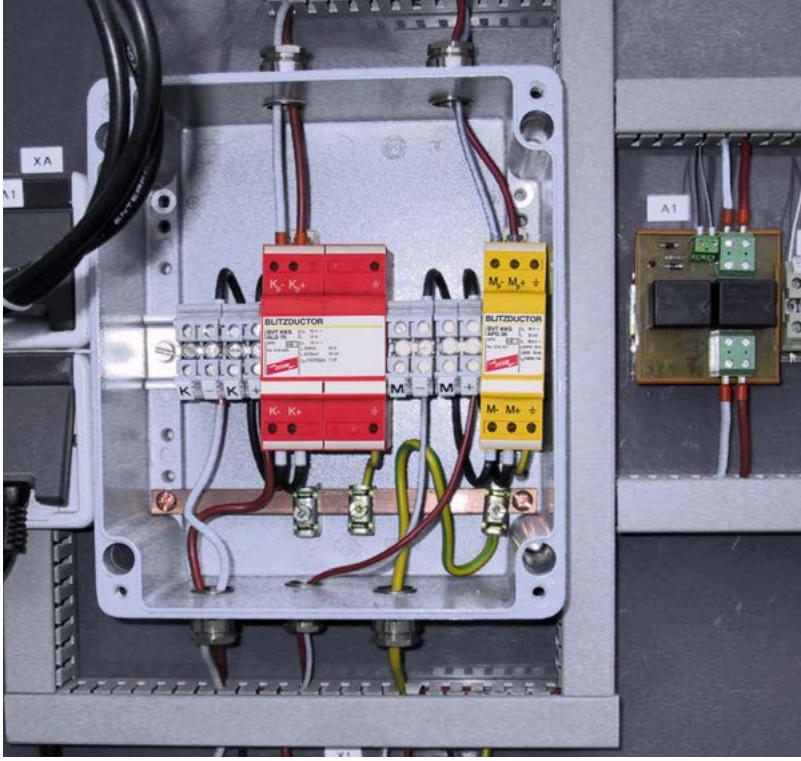

Protection of cathodic protection rectifiers

In case of impressed current cathodic protection, the required protective current is produced by a mains-powered rectifier and fed into the protection object, for example the pipeline, via impressed current anodes. Modern rectifiers additionally feature a control device which detects the protection potential of the pipeline against a reference electrode (e.g. Cu/$CuSO_4$ electrode) and automatically sets the optimal cathodic protective current.

A cathodic protection system mainly consists of:
- Cathodic protection rectifier for the protective current
- Control devices with reference electrode
- Impressed current anodes

Since the cathodic protection rectifiers are galvanically connected to the pipeline, anodes, system earth and reference electrode, overvoltage can occur which may interfere with or even destroy the devices and presents a high risk of fire.

The DEHN protection solutions can cope with the following overvoltage:
- Transient overvoltage (direct and indirect lightning effects and switching operations)
- Temporary overvoltage (short-circuits resulting from traction current and high-voltage systems)

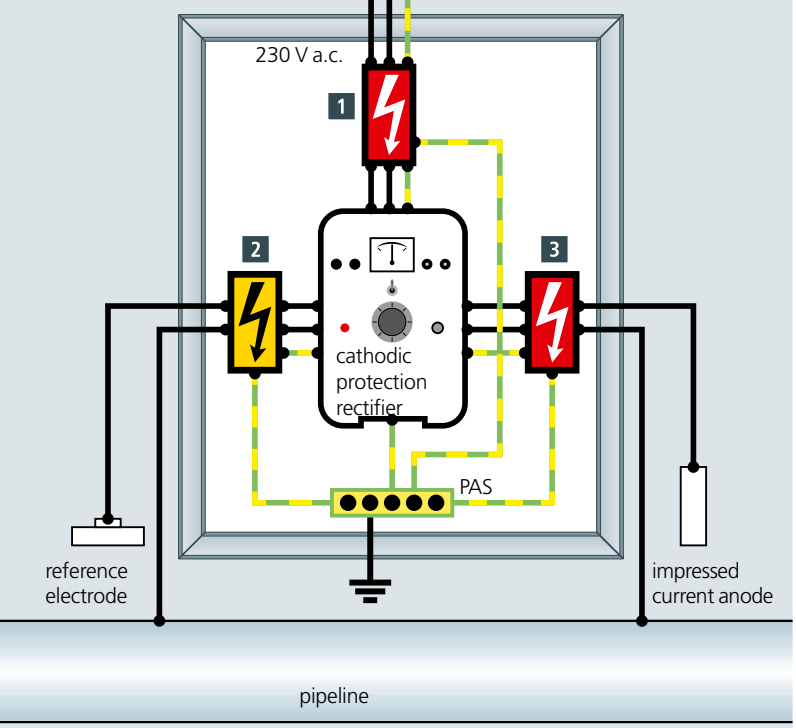

Protection solution for protective currents up to 12 A

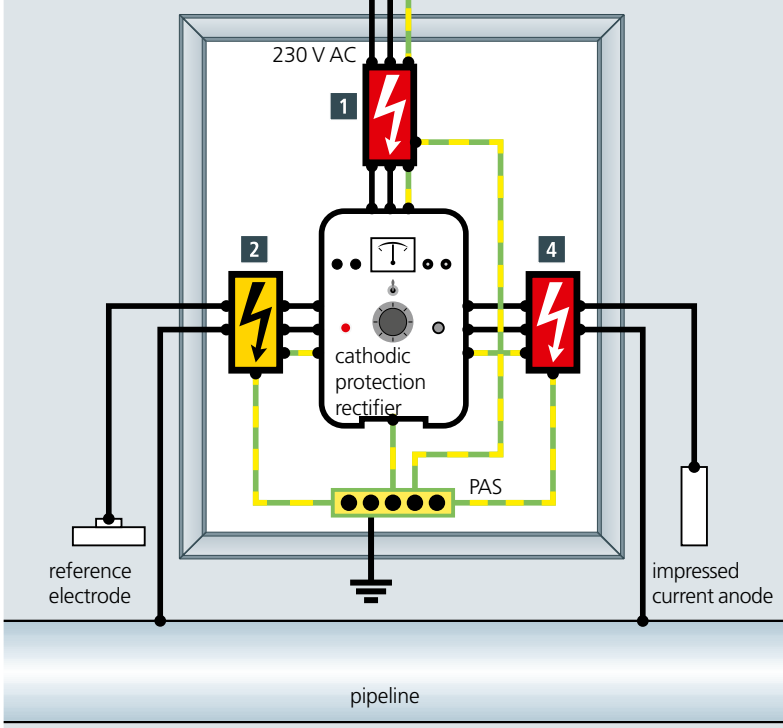

Protection solution for protective currents between 12 A and 60 A

1 DEHNventil® 2P

Modular type 1 + type 2 arrester with a high discharge capacity ensures easy replacement of protection modules without tools and protects power supply systems.
Transient: 50 kA (10/350 µs) and 50 kA (8/20 µs)
Follow current extinguishing capability: 100 kA_{rms}

Type	Part No.
DV M TT 2P 255 FM	951 115

2 BLITZDUCTOR® VT KKS

Type 1 + Type 2 arrester for cathodic protection systems protect the sensor measuring circuit.
Transient: 7.0 kA (10/350 µs) and 40 kA (8/20 µs)
Temporary: 20 A_{rms}

Type	Part No.
BVT KKS APD 36	918 421

3 BLITZDUCTOR® VT KKS

Type 1 + type 2 arrester for cathodic protection systems protects the impressed current anode circuit.
Transient: 7.0 kA (10/350 µs) and 40 kA (8/20 µs)
Temporary: 20 A_{rms}

Type	Part No.
BVT KKS ALD 75	918 420

4 DEHNbloc® / DEHNguard®

Type 1 + type 2 arrester combination consisting of a DEHNbloc type 1 arrester and a DEHNguard S type 2 arrester with a high discharge capacity. Ensures easy replacement of protection modules without tools and protects the impressed current anode circuit.
Transient: 35 kA (10/350 µs) and 40 kA (8/20 µs)
Follow current extinguishing capability: 50 kA_{rms}

Type	Part No.
DBM 1 150 FM	961 115
DG S 150 FM	952 092

4 Busbar

Busbar / modular wiring system, single-phase, two-pole, copper, 16 mm^2

Type	Part No.
MVS 1 2	900 617

More protection solutions are available on request. Please send an e-mail to info@dehn.de.

Protection of insulating joints and flanges

Insulating joints and flanges are used to electrically (galvanically) isolate cathodic protection pipeline systems against system earth or to divide high voltage interfered pipelines into individual pipeline sections. Cathodic protection systems are electrically isolated until the dielectric strength of the insulation of the insulating joint / flange is reached. The dielectric strength of insulating joints can be exceeded by overvoltage resulting from a lightning strike to exposed parts of a pipeline system or the effects of short-circuit currents of parallel high-voltage lines. This may lead to sparking, leakage or destruction of the insulating joint. Isolating spark gaps for use in hazardous areas (ExFS) with adequate and correctly installed connection systems protect this insulating clearance against transient and temporary overvoltage. In addition, they discharge the overvoltage energy in a dangerous potentially explosive atmosphere without sparking.

The following protection goals can be achieved with the DEHN protection solutions:

- Protection of the insulation in case of temporary and transient overvoltage
- Explosion protection by tested and non-sparking connection systems as well as ATEX and IECEx approvals

If the ExFS is incorrectly installed, the insulation may be destroyed. This may entail high costs particularly in case of underground insulating joints. Therefore, DEHN offers product support and adapted protection solutions, for multiple applications.

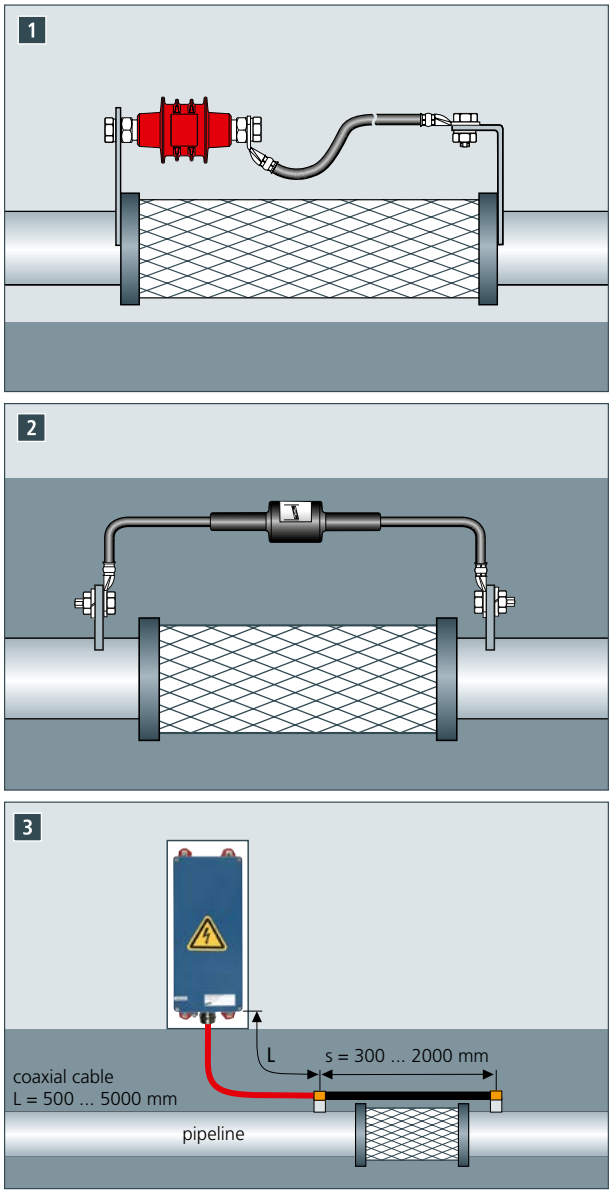

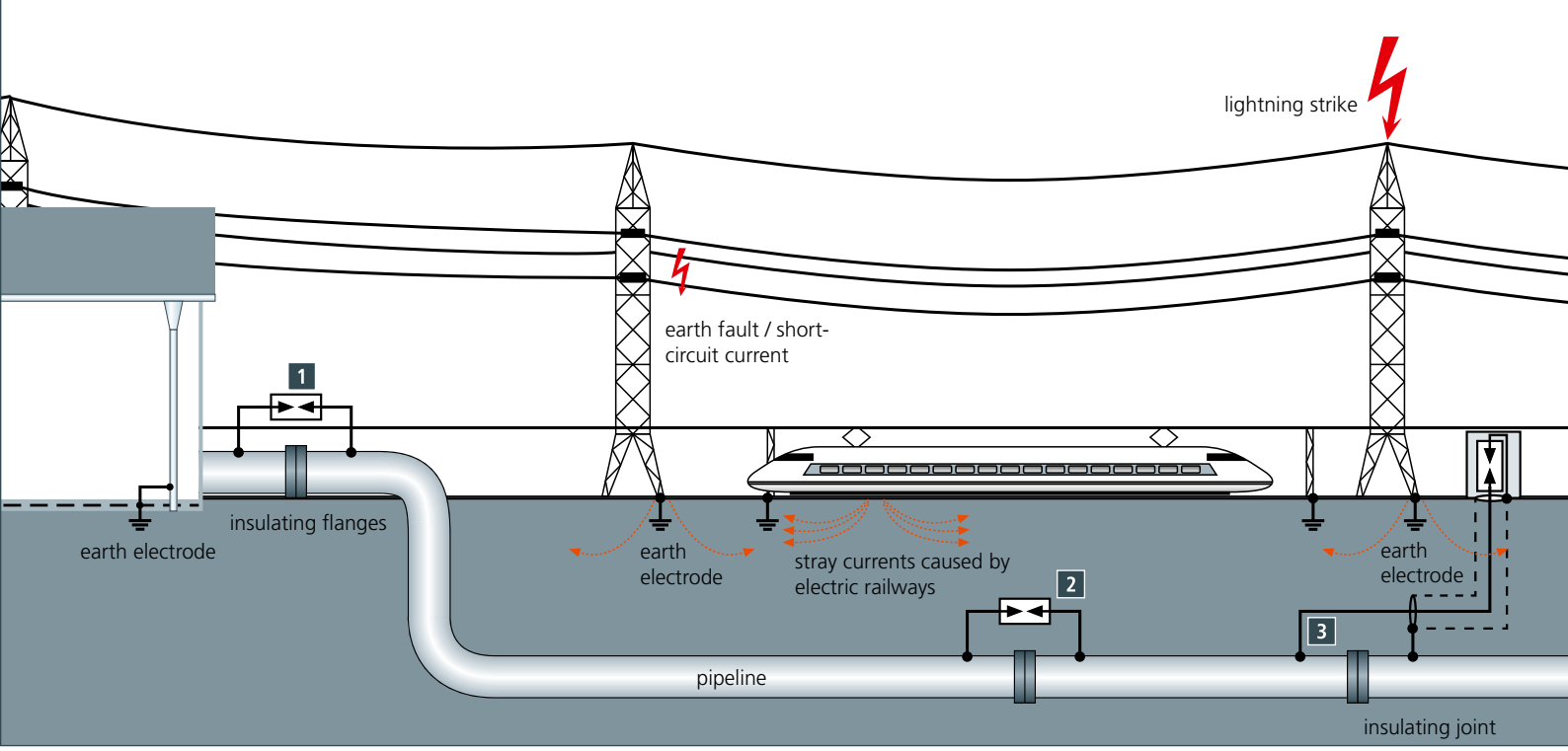

EXFS 100 / EXFS 100 KU Isolating spark gap

- EXFS 100 spark gap certified according to ATEX (94/9/EC) and IECEx
- Safe use in Ex zone 1/21 and 2/22
- Suited for non-sparking connection to pipelines, insulating flanges or insulating joints in hazardous areas
- High a.c. discharge capacity, low sparkover voltage
- Suitable for protecting insulating joints or flanges tested to class 2 / 2.5 kV_{rms}
- Transient: 100 kA (10/350 µs) and 100 kA (8/20 µs)
- Temporary: 500 A_{rms} / 0.2 s

1 EXFS 100 Isolating spark gap

- Aboveground isolating spark gap for protecting aboveground insulating joints
- Easy maintenance/inspection thanks to aboveground installation

Type	Part No.
EXFS 100	923 100

2 EXFS 100 KU Isolating spark gap

- Buried isolating spark gap for buried insulating joints
- High maintenance effort

Type	Part No.
EXFS 100 KU	923 101

3 EXFS Coaxial connection box

- Connection box for coaxial (low-impedance) connection of EXFS 100 isolating spark gaps
- Aboveground installation for protecting buried insulating joints
- Easy maintenance/inspection thanks to aboveground installation

Type	Part No.
NAK SN4631	999 990

Protection of field instruments

The surge immunity of field devices such as pressure or temperature transmitters complies with the common requirements of the EMC standards, but is not sufficient for most overvoltages caused e.g. by lightning strikes. The transmitters are often destroyed and dangerous sparking could lead to significant danger and damage in a potentially explosive atmosphere. The function of surge protective devices from DEHN is to repeatedly discharge overvoltage without sparking and to simultaneously protect the electronics of the transmitter.

The Yellow/Line series from DEHN includes a comprehensive product portfolio for protecting measuring and control systems, for example arresters for analogue 4 … 20 mA signals, field bus systems or intrinsically safe systems in potentially explosive atmospheres.

The following protection goals can be achieved with the DEHN protection solutions:

- Protection of devices and components in case of transient overvoltage
- Explosion protection

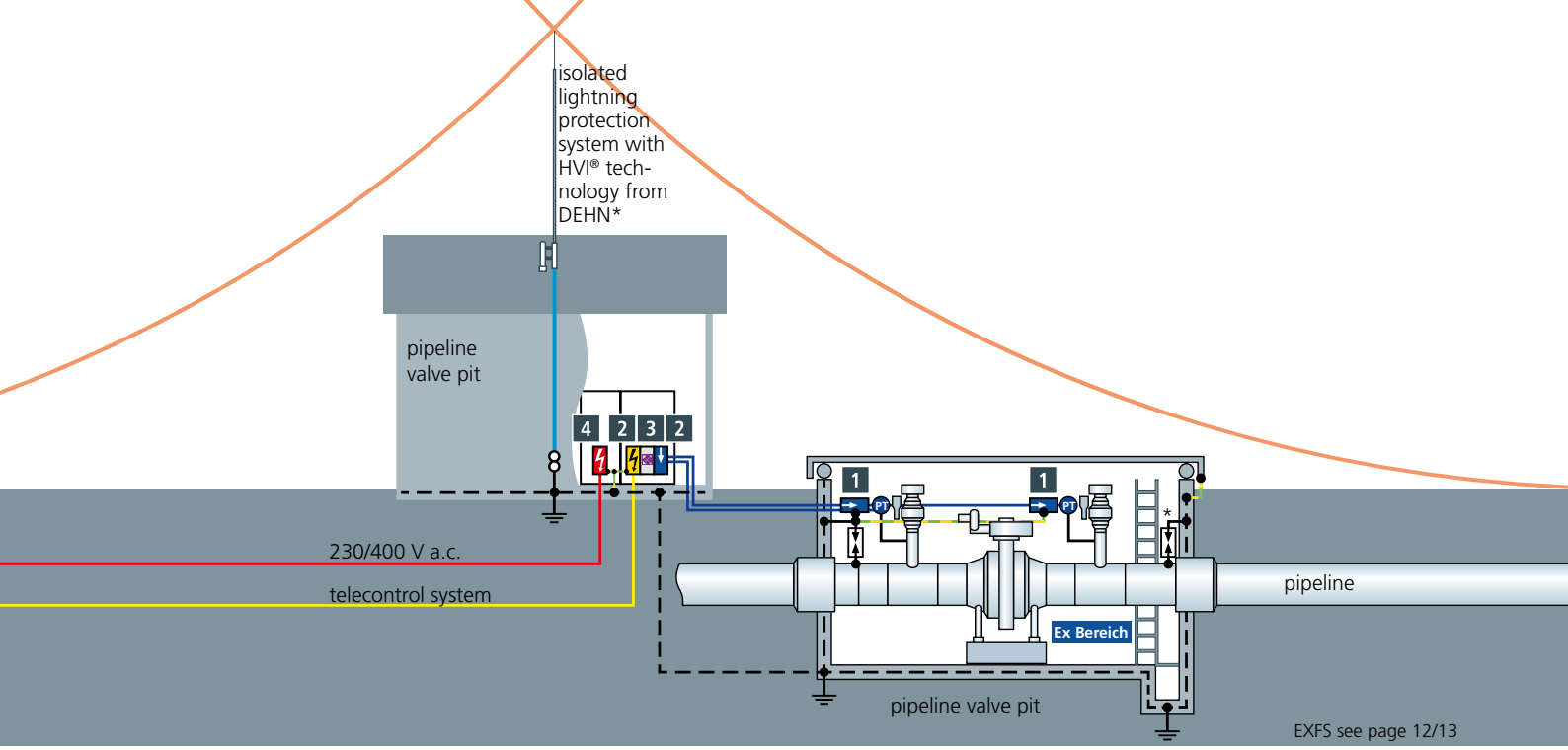

1 DEHNpipe MD Ex (i) DEHNpipe CD Ex (i)

- Surge arrester is screwed onto two-wire field devices (Ex (i) version) for protecting intrinsically safe systems and balanced interfaces according to NAMUR**.
- Nominal voltage: 24 V d.c.
- With M20 x 1.5 or ½ 14 NPT thread
- MD Ex (i): series connection
- CD Ex (i): parallel connection

Type	Part No.
DPI MD EX 24 M 2	929 960
DPI CD EXI 24 M	929 961

2 BLITZDUCTOR® XT and BLITZDUCTOR® XT Ex (i)

Combined lightning current and surge arrester for two, three or four-pole interfaces and intrinsically safe measuring circuits; with base part and plug-in protection module

Type	Part No.
BXT ML4 BD EX 24	920 381
BXT BAS EX	920 301
BXT ML2 BD 180	920 247
BXT BAS	920 300

3 Condition monitoring system with LifeCheck® sensor

Maximum availability thanks to permanent condition monitoring of arresters via LifeCheck® technology

Type	Part No.
DRC MCM XT	910 695

4 DEHNventil® modular

Modular combined arrester with a high discharge capacity ensures easy replacement of protection modules without tools

Type	Part No.
DV M TT 255 FM	951 315

* For more detailed information on HVI® Conductors, please visit www.dehn-international.com
** NAMUR: Standardisation association for measurement and control

www.dehn-international.com/partners

Surge Protection
Lightning Protection
Safety Equipment
DEHN protects.®

DEHN + SÖHNE
GmbH + Co.KG.

Hans-Dehn-Str. 1
Postfach 1640
92306 Neumarkt
Germany

Tel. +49 9181 906-0
Fax +49 9181 906-1100
info@dehn.de
www.dehn-international.com

DS249/E/0917